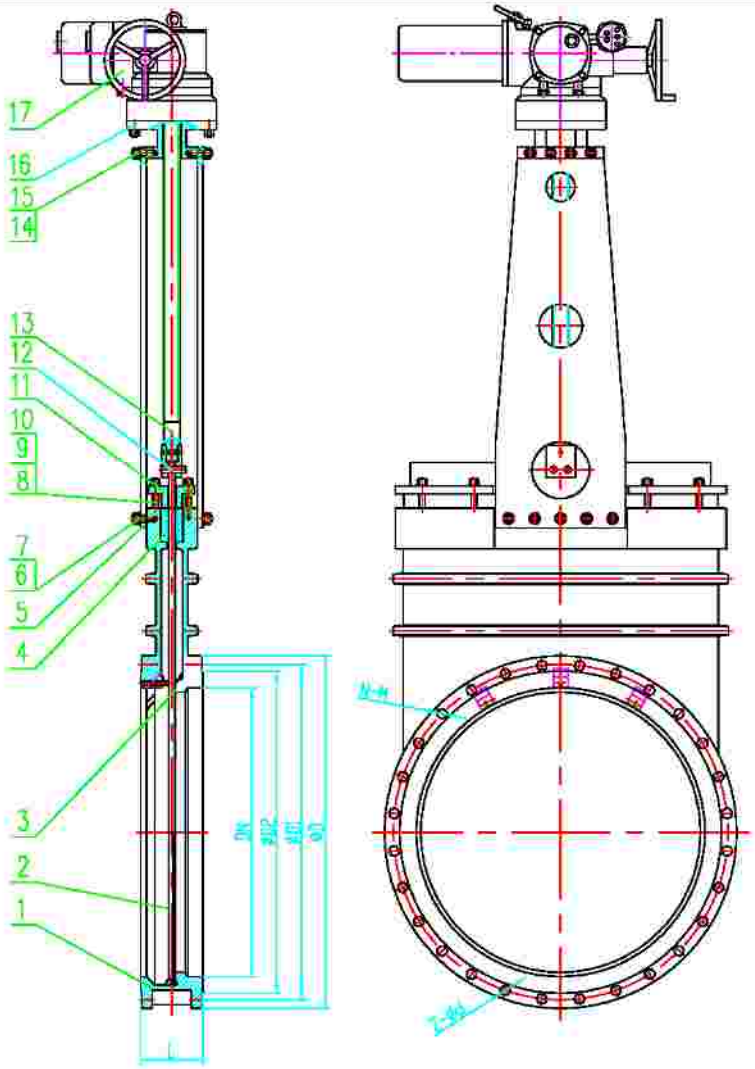

WORKING PRESSURE:10bar

DN	L	D	D1	D2	N-M	Z-d
800	190	1010	950	905	10-M30	14-Φ34
1200	254	1450	1380	1325	14-M36	18-Φ41

NO	NAME	MATERIAL	NO	NAME	MATERIAL
10	WASHER	0215	20		
9	NUT	201	19		
8	BOLT	97	18		
7	NUT	201	17	ELEC.DEVICE	
6	BOLT	97	16	YOKE	Q235
5	YOKE	Q235	15	NUT	35
4	PACKING	GRAPHITE	14	BOLT	45
3	SEAT	NBR	13	STEM	304
2	WEDGE	304	12	PIN	45
1	BODY	WCB	11	GLAND	WCB

H-H VALVTEC INC
Robinetterie Industrielle,Tuyauterie et Accessoires
Canada

THE BEST SOLUTION TO YOUR CORROSIVE PROBLEMS

1605, Autoroute 440,
Suite 2145, Chomedey
Laval, Quebec, H7L 5W3,
CANADA

Any Copy, Reproduction Or Translation Of This
Information Either Wholly Or In Part, Without
The Express Written Agreement Of VALVTEC
Canada Is Expressly Forbidden